LISSÉ Bath spout for wall mounting - Brushed Platinum

13 801 845 Product version from 3/9/2016

- 210mm projection
- circular normal flow
- hole diameter 37 mm
- 1/2" connection
- plug-link mounting
- max. flow 21.5 l/min at 3 bar flow pressure
- WRAS

Brushed Platinum	13 801 845-06
Chrome	13 801 845-00
Dark Chrome	13 801 845-19
Brushed Light Gold	13 801 845-27
Matte Black	13 801 845-33
Brushed Chrome	13 801 845-93
Brushed Dark Platinum	13 801 845-99

Recommended miscellaneous

Concealed wall elbow - 35 085 970 90
- max. recess depth mm
- min. recess depth mm

We reserve the right to change designs, product range and technical specifications without prior notice.
More information can be found at: www.dornbracht.com +49 (0) 2371 8899 900 mail@dornbracht.com

LISSÉ Bath spout for wall mounting - Brushed Platinum

13 801 845 Product version from 3/9/2016

mm [inches]

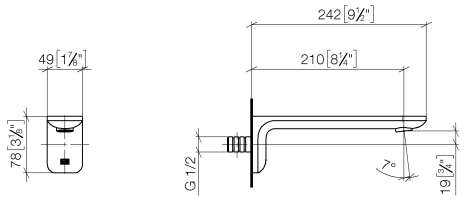

Flow rate chart

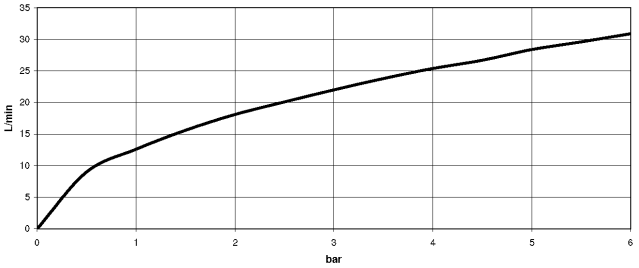

Codes & Standards

ASME A112.18.1	cUPC	DIN 4109	ISO 3822
Scottish Water Byelaws	UK Water Supply Regulations	Ü-Zeichen	

LISSÉ Bath spout for wall mounting - Brushed Platinum

13 801 845 Product version from 3/9/2016

Certificates

IAPMO_4976 LGA_29 WRAS_2207

LISSÉ Bath spout for wall mounting - Brushed Platinum

13 801 845 Product version from 3/9/2016

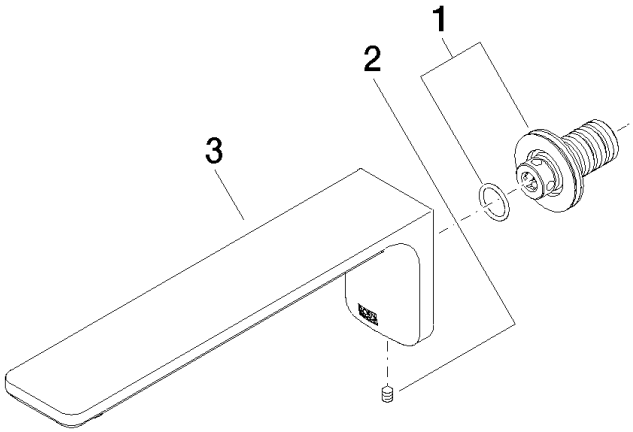

Spare parts list

No.	Item Number	Name	Quantity used	Delivery time
1	90 24 03 108 00 90	nipple set	1	2
2	90 31 11 004 00 90	pin	1	2
3	90 11 84 014 02-06	spout	1	10

We reserve the right to change designs, product range and technical specifications without prior notice.
More information can be found at: www.dornbracht.com +49 (0) 2371 8899 900 mail@dornbracht.com